https://doi.org/10.52202/080513-0378

ASH
3

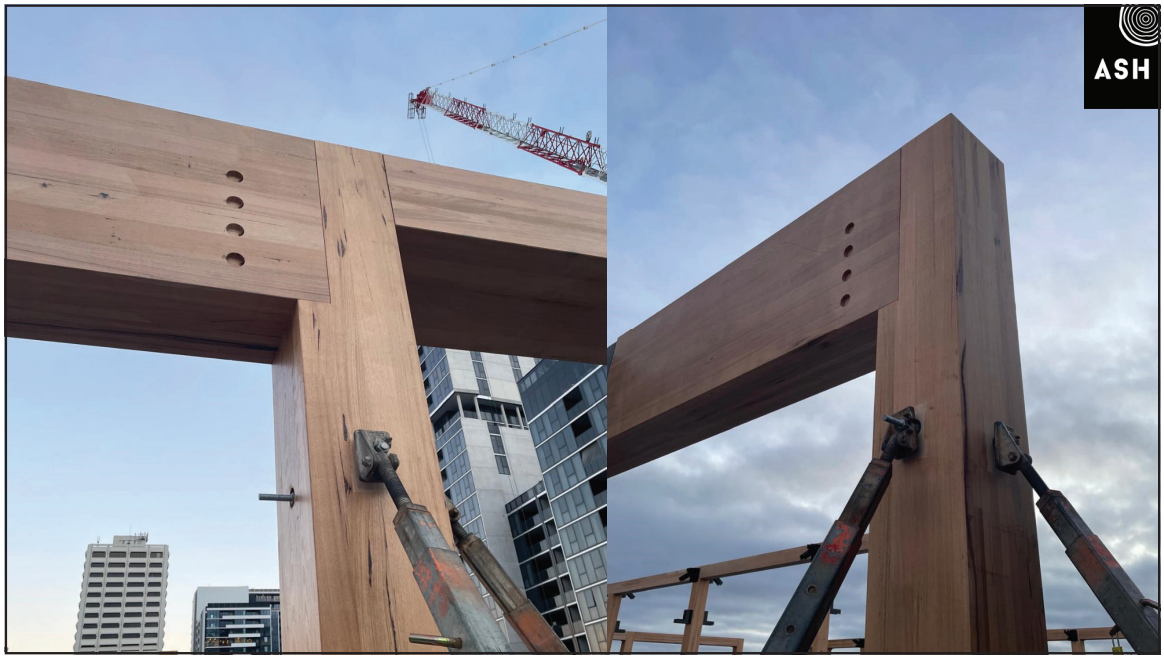
ASH

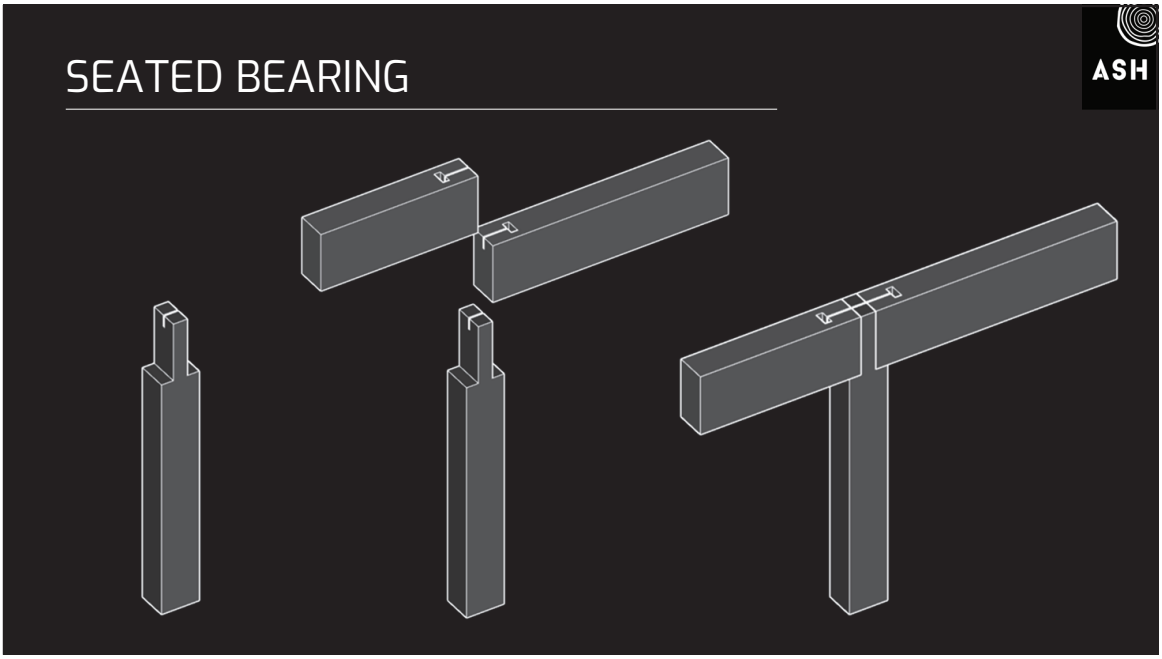

https://doi.org/10.52202/080513-0378

SIMPLE
QUICK
CHEAP
SAFE
TOLERANCE

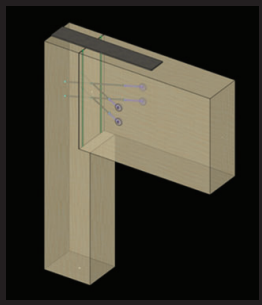

SEATED BEARING

ADVANTAGES:

- MINIMAL CNC
- PROGRAMME EFFICIENCIES
- MINIMAL BRACKETRY AND FASTENER COSTS
- MORE TOLERANCE
- ENHANCED SAFETY IN DESIGN
- MINIMAL SITE ASSEMBLY TIME
- NO PRE-ASSEMBLY REQUIREMENTS
- MINIMAL ASSEMBLY NOISE

LIMITATIONS:

- ARCHITECTURAL??

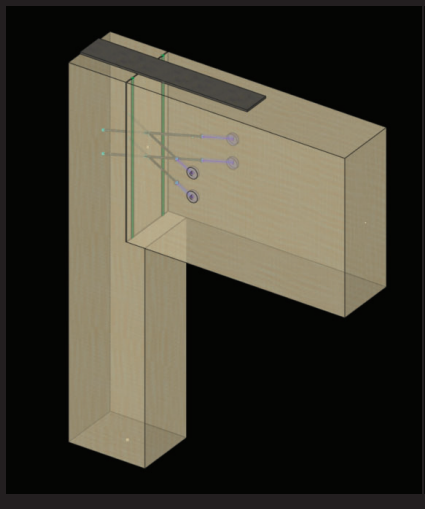

https://doi.org/10.52202/080513-0378

SEATED BEARING

- Main approach is to keep it simple
- Use the ASH hardwood material to play to its benefits
- High perpendicular to grain strength
- Very dense, high joint properties
- Lends itself to traditional methods (bearing)

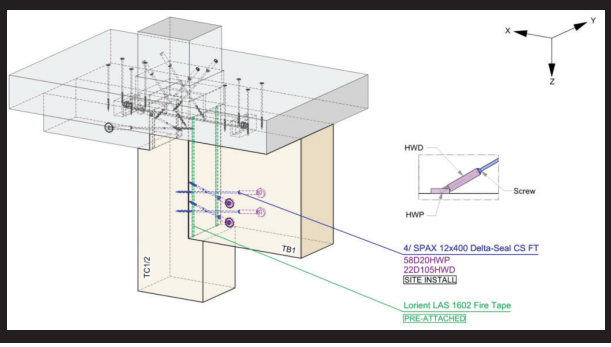

SEATED BEARING

- Average install speed 3 mins per beam
- Easy to install and easy to inspect
- Screws concealed visually and within char layer
- Plugs cut to suit, pilot holes for alignment

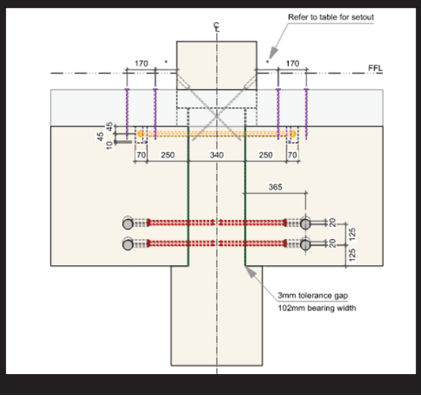

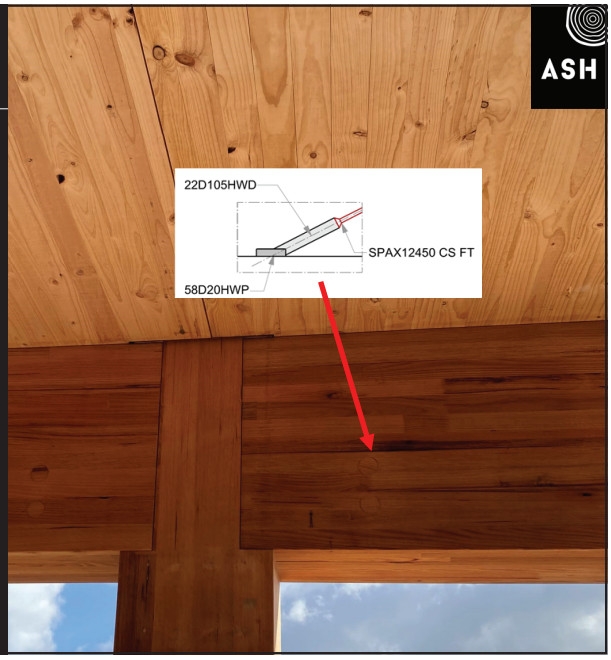

https://doi.org/10.52202/080513-0378

ROBUSTNESS TIE

- Simplified tension tie for robustness case
- Bypassed need for large plates and dowels in tension and utilized hardwoods high parallel to grain strength
- Quick install on site, minimal CNC work required

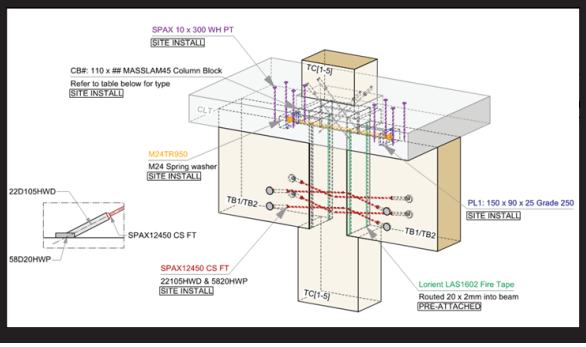

HARDWOOD VS SOFTWOOD

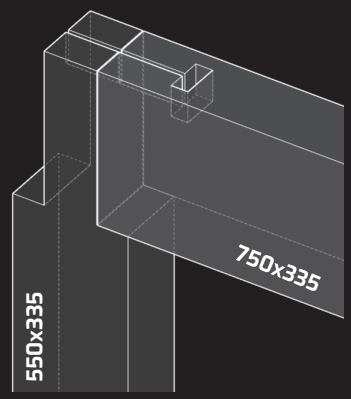

MASSLAM 45

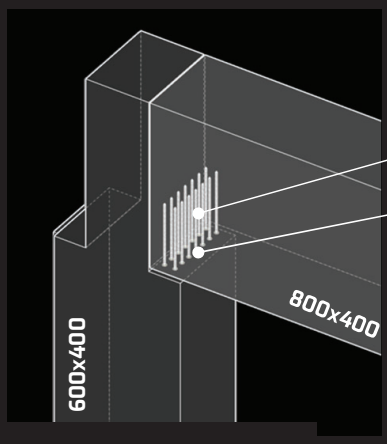

GL24

Larger member size

Reinforcing screws

Bearing plate

Fire?

https://doi.org/10.52202/080513-0378

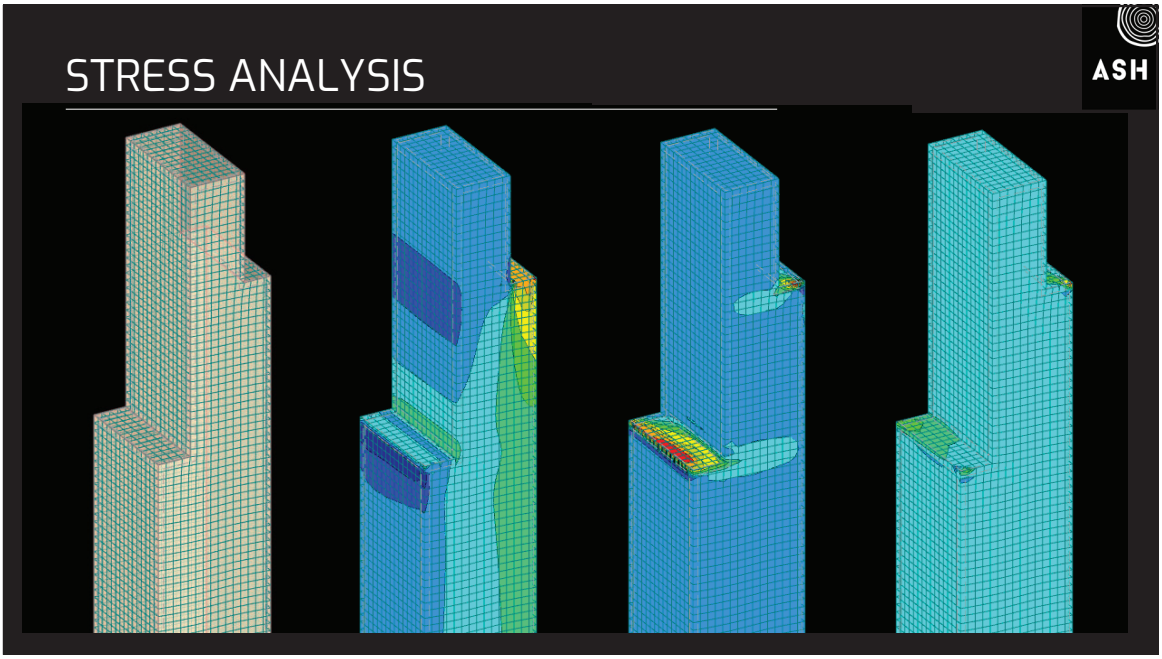

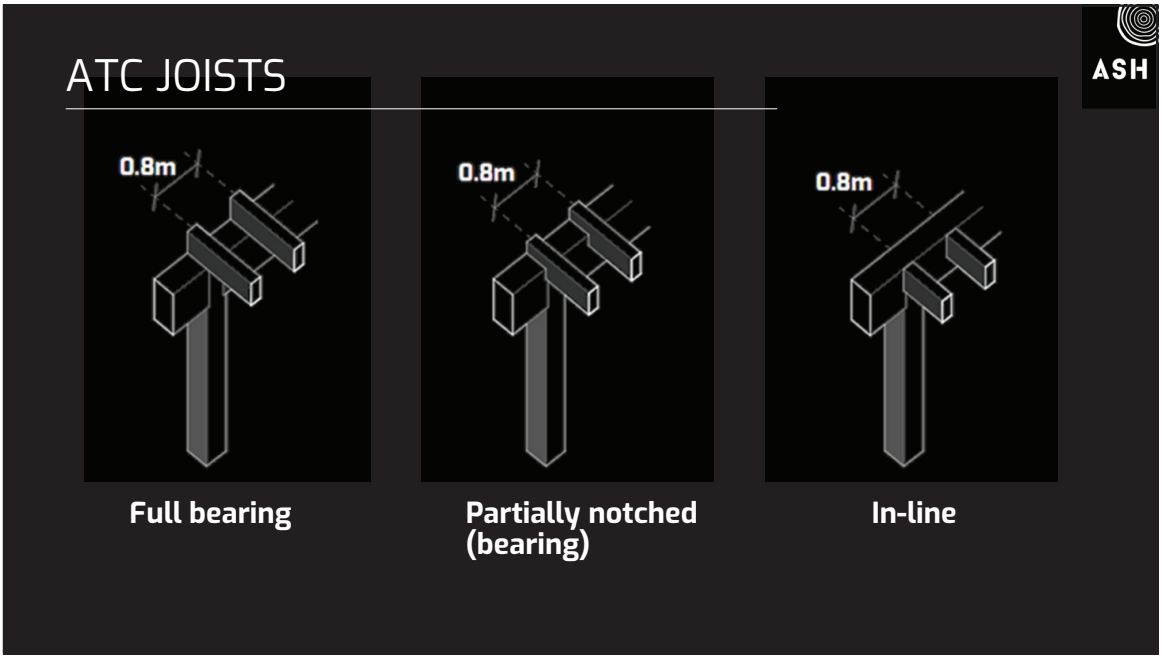

https://doi.org/10.52202/080513-0378

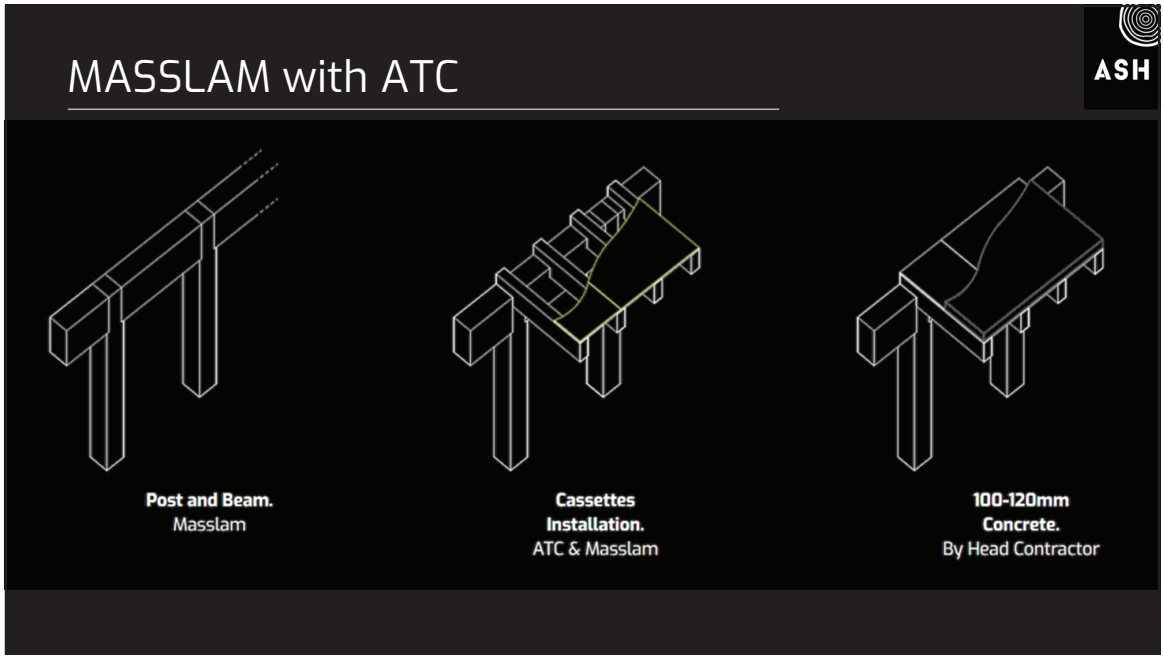
MASSLAM with ATC
ASH
Post and Beam.
Masslam
Cassettes
Installation.
ATC & Masslam
100-120mm
Concrete.
By Head Contractor

MASSLAM & ATC ML38 MOCK-UP
ASH
Optimum 8
Haulotte

https://doi.org/10.52202/080513-0378